UNiLUX

TWISTLED

TWISTLED

The TWISTLED desk lamp provides uniform, soft, and comfortable light, ideal for reading and extended work. Illuminate your workspace without disturbing others.

TWISTLED

- **USB charging port**: connect your phone or tablet easily via the USB port (cable not included).
- **Adjustable light intensity and color temperature**: the base features two touch switches—one for continuous color temperature adjustment and another for continuous intensity control. Whether you're relaxing, reading, or working, this lamp adapts to your needs.
- **Modern and sleek design**: TWISTLED stands out with its elegant, clean lines.
- **Optimal light distribution**: equipped with the latest generation LEDs, it provides uniform lighting that's gentle on your eyes.
- **Flexibility**: the lamp's rotatable head (up to +/- 180°), adjustable arm (up to 150°), and rotatable base (up to +/- 170°) allow for versatile positioning while maintaining excellent stability.

Warranty: 2 years
Maximum height: 43 cm / minimum height: 26 cm
Materials: aluminum arm and head / plastic base

Features

Measurement in Lux on the worktop in top view at 35 cm:

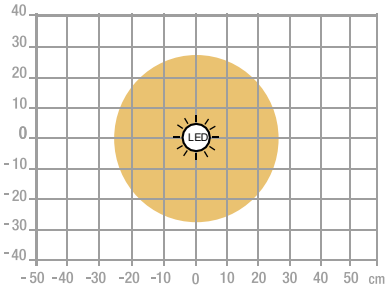

> 500 Lux

< 500 Lux

Measurement in Lux on the work surface in profile view at 35 cm:

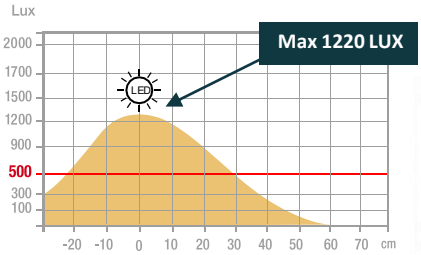

Measurement in nanometer of the light spectrum

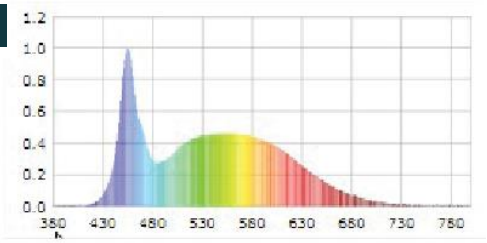

SAP no.	400165037
EAN code	3595560034444
Color	Black
Luminous flow	1558
Lux at 35cm	1220 at 35 cm
Lm/W	111
Color T° (K)	2700 at 6000
CRI	86
Source lifetime (h)	50 000
Energy consumption (kWh/1000 h)	14
USB Port	Yes (USB 2.0 Type A, 5V, Max. 1A)
Inductive charger	No
Net weight (kg)	0.92

UNiLUX

ENVIRONMENT

UNILUX focuses on sustainable development and takes concrete measures to reduce its environmental footprint and best meet the evolving expectations of its consumers.

We are notably committed to reduce our greenhouse gas emissions by 29% between 2021 and 2030 in response to the "Net Zero Carbon Emissions by 2050" challenge. Eco-design, emissions reduction and continuous improvement are at the core of our concerns.

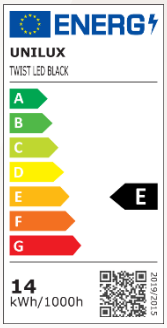

OUR EXPERTISE

Task lighting

In the office, we are often exposed to constant artificial lighting. Poor lighting quality can lead to headaches, sleep disturbances, and decreased concentration. According to a recent study, only 34% of workspaces achieve the recommended illuminance level of 500 lux by Occupational Medicine, in accordance with DIN EN 12464-1* standard. Task lighting is frequently used to provide additional brightness when the primary lighting is insufficient.

* Standard setting the limits that workplace lighting must adhere to.

Our tips to light up your workspace :

- Position your desk near windows to benefit from natural daylight and reduce eye fatigue.
- Ensure that the lamp head is positioned at least 35 cm above the work surface.
- Place the lamp on the opposite side of the hand that holds the mouse or writes.
- Position the lamp for easy adjustment.
- Ensure that your lamp is placed to avoid glare on screens and prevent direct glare in your field of vision.

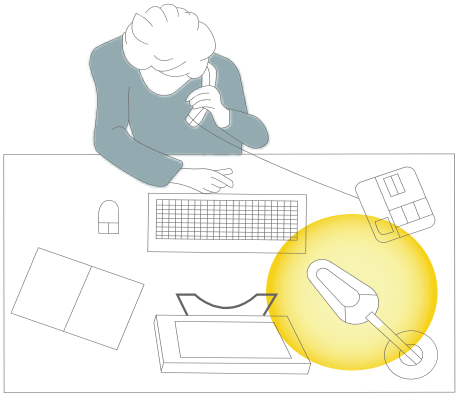

ABOUT UNILUX

Founded in 1952, UNILUX is a French company specializing in lighting and ergonomics. Over the past 25 years, UNILUX has become a benchmark in the field of lighting in France and throughout Europe. In 2000, UNILUX joined the French group HAMELIN, a European leader in stationery. The company modernizes and evolves to become a creator of ambiance and well-being.

OUR CERTIFICATIONS

SYSTEM CERTIFICATION ISO 9001 SGS

SYSTEM CERTIFICATION ISO 14001 SGS

SYSTEM CERTIFICATION ISO 45001 SGS

UNILUX

USER GUIDE

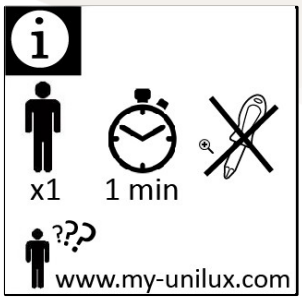

FR : Source lumineuse remplaçable (LED uniquement) par un professionnel
EN : Replaceable (LED only) light source by a professional
DE : Auswechselbare (nur LED) Lichtquelle durch einen Fachmann
ES : Fuente de luz reemplazable (sólo LED) por un profesional
IT : Sorgente luminosa sostituibile (solo LED) da un professionista
DK : Udskiftelig (kun LED) lyskilde af en professionel
NL : Verwisselbare (alleen LED) lichtbron door een vakman
SE : Utbytbar ljuskälla (endast LED) av en professionell
FI : Vaihdettava (vain LED) valonlähde ammattilaisen toimesta.
NO : Utskiftbar (kun LED) lyskilde av en profesjonell
PL: Wymienialne (tylko LED) źródło światła przez profesjonalistę
PT: Fonte de luz substituível (apenas LED) por um profissional

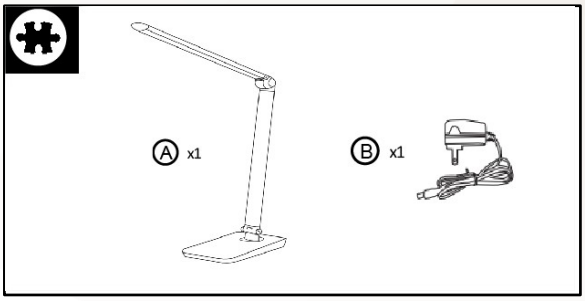

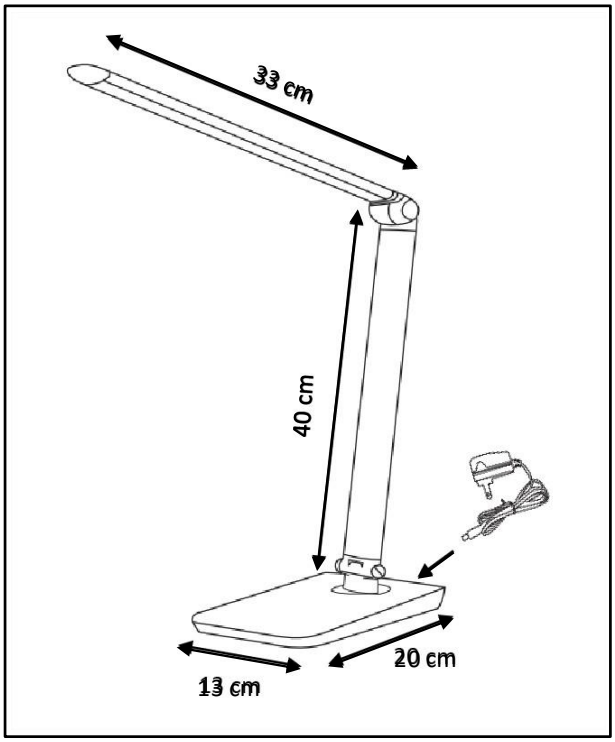

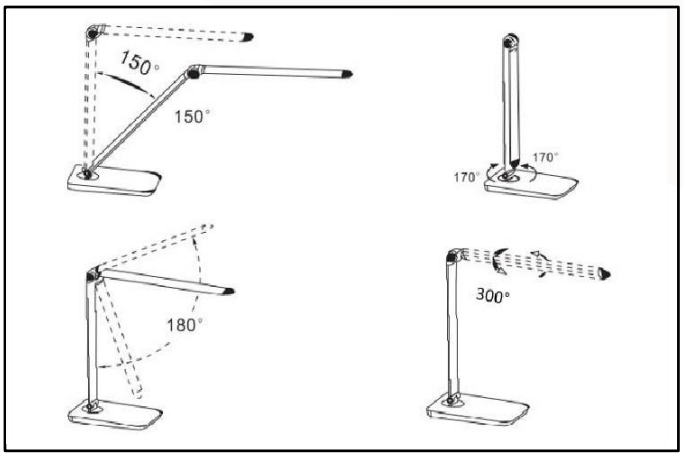

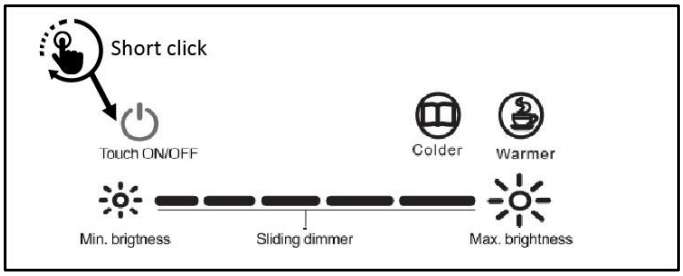

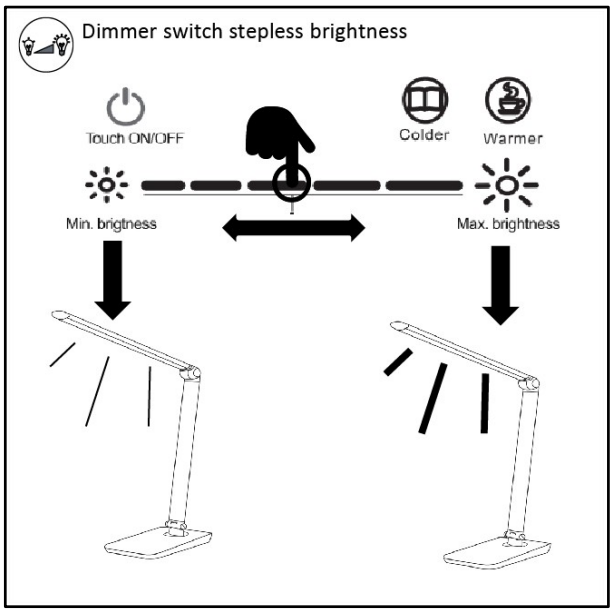

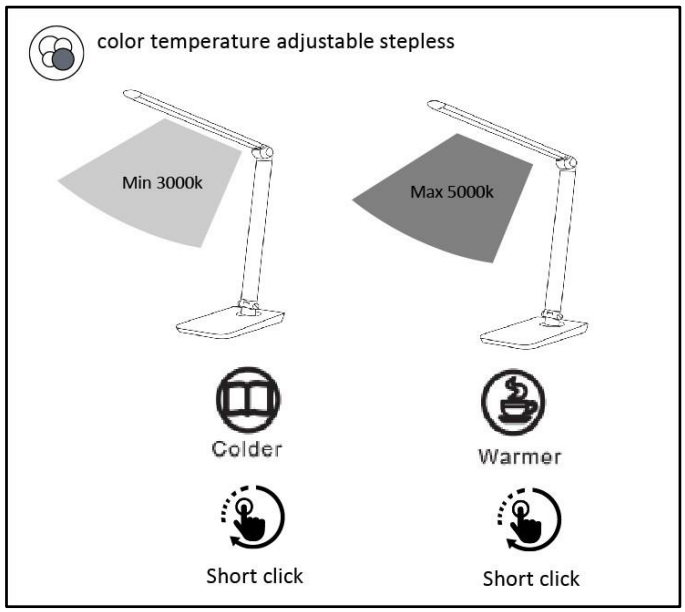

For customer support or information please contact us on our website **www.my-unilux.com**, rubric “Customer support”

Edition du 24 mai 2022

UNiLUX

pCon Planner

Integrate Unilux products seamlessly into your 3D space designs.
Access to essential data : dimensions, prices, etc.

Website

Explore our full range, tips, blog articles, and more.

Do you have any questions ?

Our customer service is always available to assist you.

GLOSSARY

- ON / OFF
- Light intensity dimming
- Color temperature dimming
- USB port
- Replaceable light source (LED only) by a professional.
- European compliance

17 avenue du Parc TECHNOPOLIS
91380 Chilly Mazarin – France
www.my-unilux.com
E-mail : contact.unilux@hamelinbrands.com